SPX532

MAX 3200 kg | L x W x H 3120 x 770 x 1950 mm | max 17,3 m with jib | max 14,8 m with jib

The user-friendliest crane ever, featuring the most advanced stability system.
A top level performance is ensured with this new generation mini crane.

Technical Information

Dimensions	L x W x H	3120 x 770 x 1950 mm
Stab. Area		4400 x 4400 mm

		Kg
Crane & Options Weights	SPX532CDH	2320
	/	200
	Multiple Fall	40
	JIB	200
	Manual Ext.	14
	Jib Pulley Head	8

SPX532	Diesel Engine	KUBOTA D902-E4B	16.1 kW 22 Hp

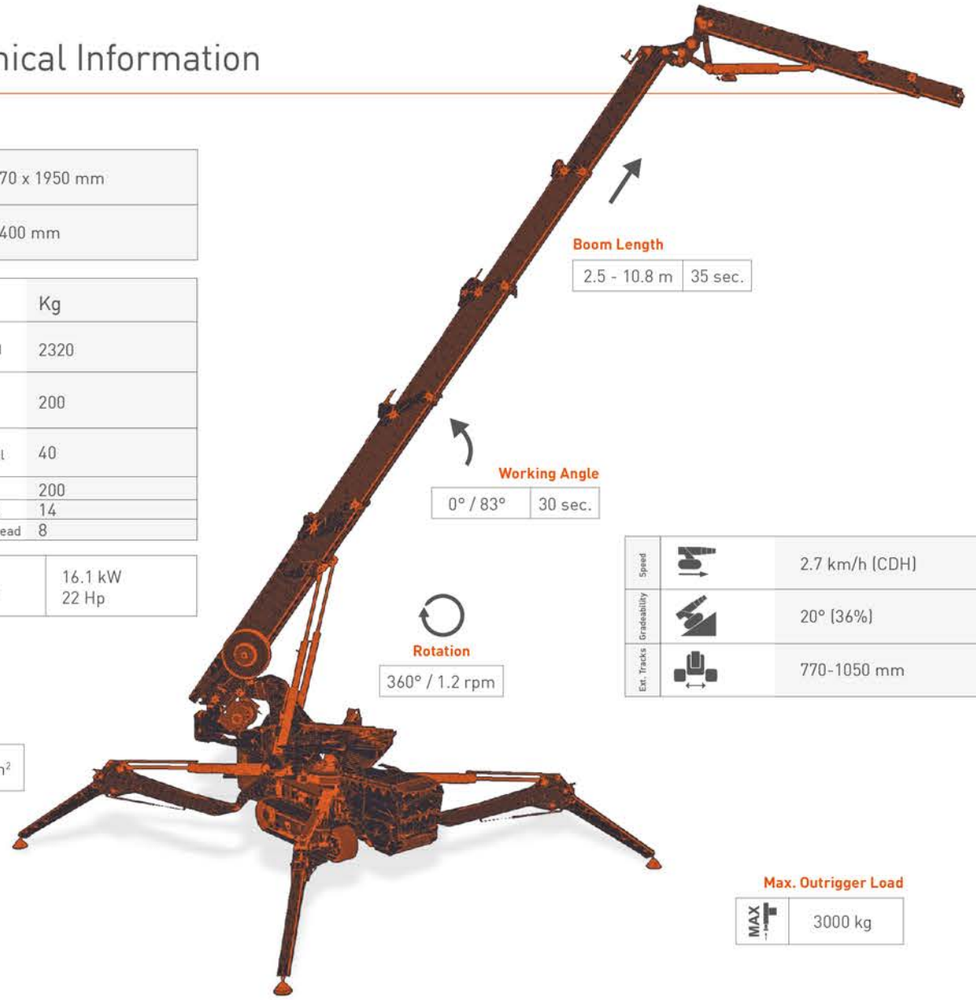

Boom Length
2.5 - 10.8 m | 35 sec.

Working Angle
0° / 83° | 30 sec.

Rotation
360° / 1.2 rpm

Speed	2.7 km/h (CDH)
Gradeability	20° (36%)
Ext. Tracks	770-1050 mm

Max. Track Load
0.63 kg/cm²

Max. Outrigger Load
MAX 3000 kg

Load Chart*

000 Capacity with jib
* Draft

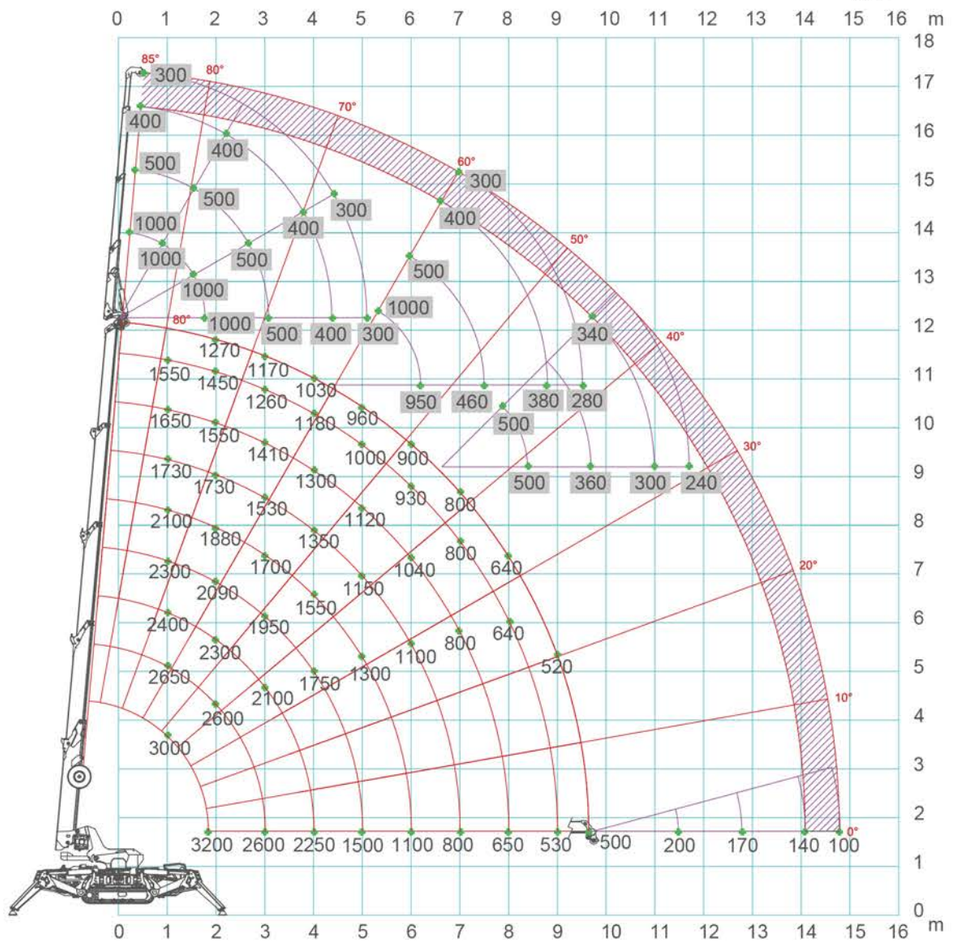

Crane Options

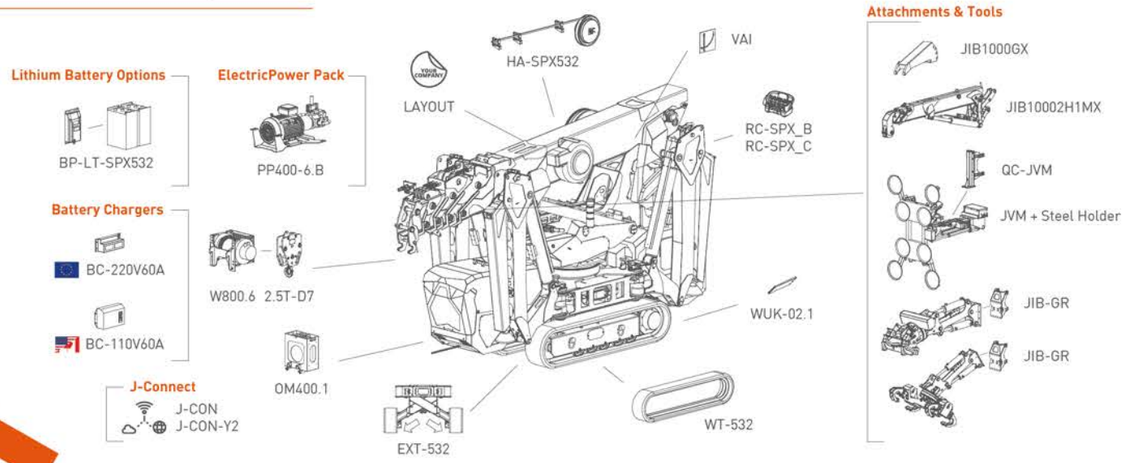
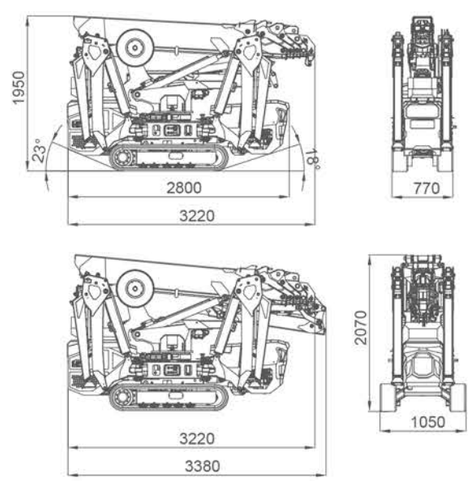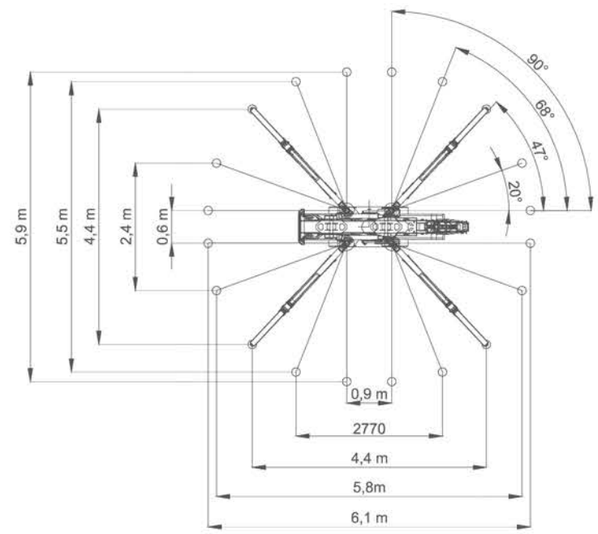
Dimensions